ISO EArth+ XYZ Gas Sample Box Wiring with Acid Pump Relay

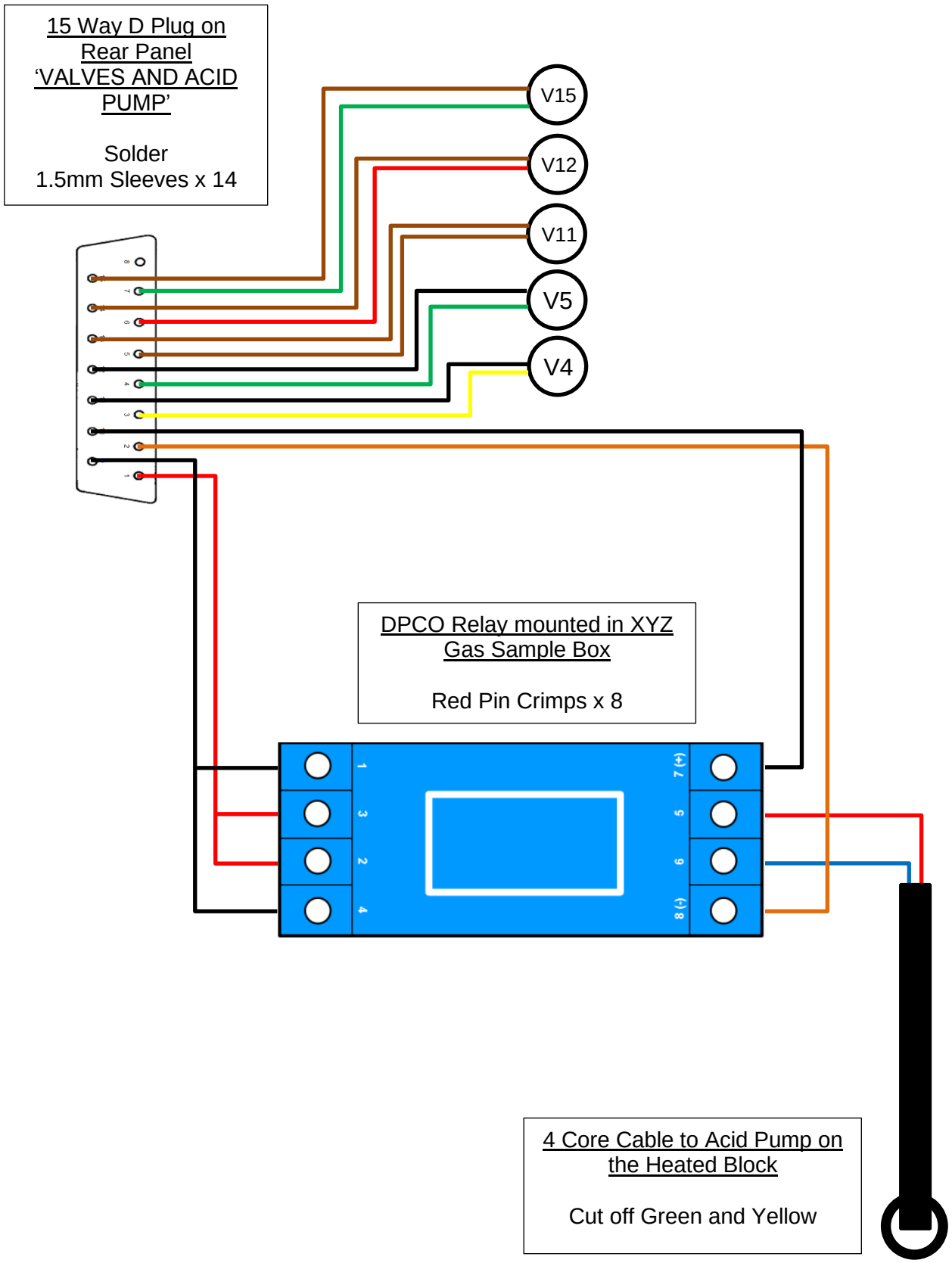

DRG No.: 10202-004-034	Revision: C
Last Edited: 05/12/2019	By: DW